HYDROPLEX

High Pressure Pump, Valve, and System Specialists

WaferMax

Throttling Valve

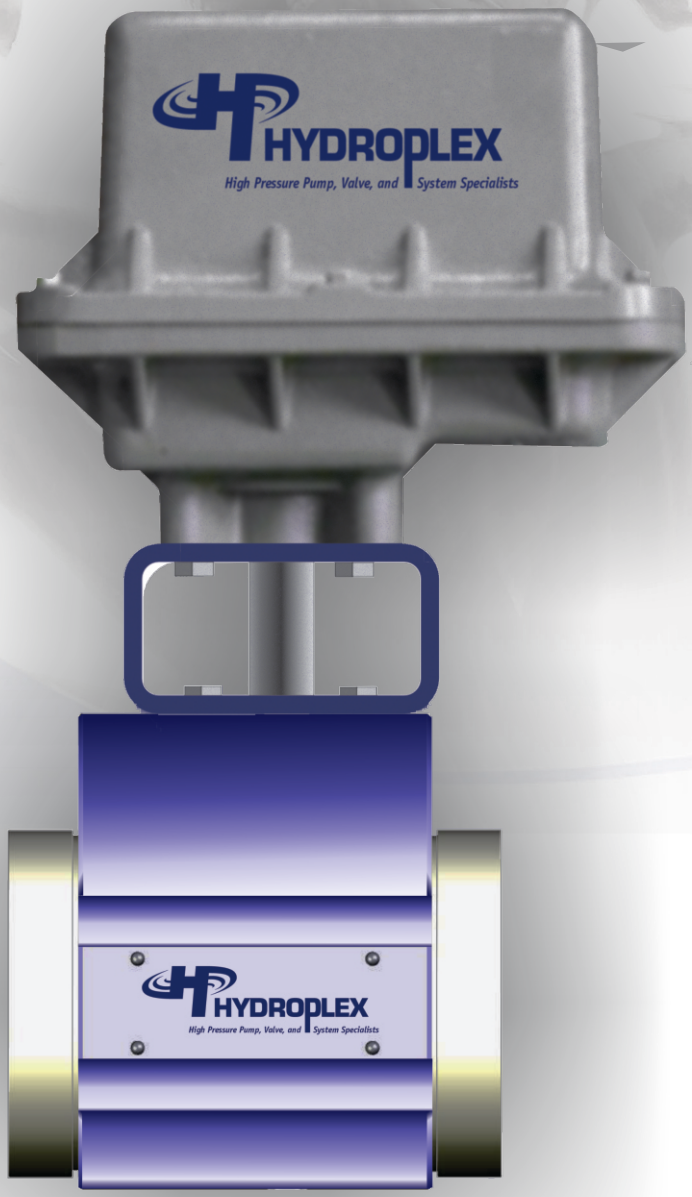

Hydroplex Delivers Process Solutions

230 W. Gloria Switch Rd. Lafayette, LA 70507 Telephone: 337-233-0626 www.hydroplex.com

WaferMax Throttling Valve

The Twin Disc Valve was initially designed to manage injection fluids in Enhanced Oil Recovery (EOR) projects, as well as to control the production of crude oil and natural gas wells. It is now used in a variety of applications when precision control of fluid is required. Applications such as gas lift, gas-assisted plunger lift, automated well control and set point control, essentially any situation that requires the management of high-pressure fluids.

As flow or pressure is regulated, wear is inevitable in any throttling valve. This typically occurs on the control surface and around the orifice, especially in globe, gate, butterfly, ball, and plug valves. However, in the Twin Disc, the control surfaces and seal surfaces are separate and distinct. The disc rotation exposes a minimum amount of control surface to the high velocity flow stream compared to other valve types. There are no obstructive shapes in the flow path, which are common in globe style and “needle and seat” valves. As a result, the Twin Discs experience reduced wear on throttling and shut-off surfaces.

The differential pressure across the discs secure them together, providing a stable control element. There are no loose or unsupported parts that could cause vibration, noise, or fatigue failures. Each time the valve is rotated, the exposed part of the disc’s surface is cleaned of foreign deposits.

Principle of Operation

The valve features two adjacent twin discs, each fitted with two precision orifices that can be either round hole or pie-shaped.

When the valve is in the fully closed position, the orifices are positioned 90 degrees out of alignment, forming an ANSI Class IV seal.

When the valve is in the throttling position, the orifices align with each other, forming a precision orifice that supports the flow or pressure requirements for the process. It is recommended that for sustained operation, the opening should not be less than 30% for gas and 40% for liquid service.

When the valve is in the full open position, the orifices align with each other, facilitating the maximum rated flow through the valve.

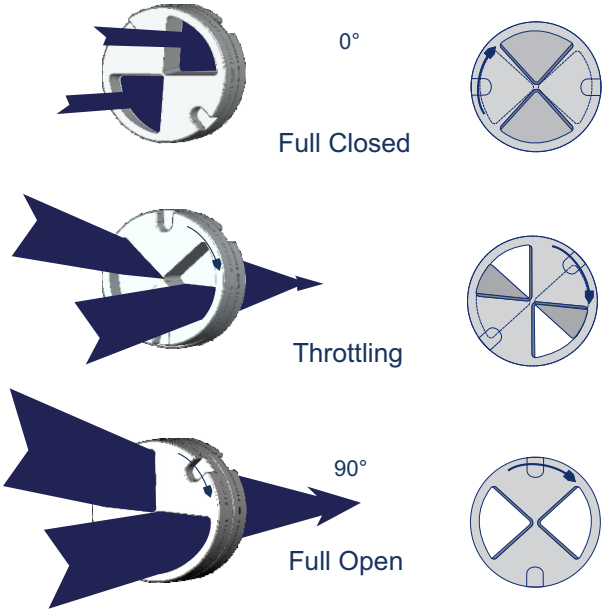

ANSI Class IV Seal

The control discs are lapped to within two light-bands of flatness (+/- 0.00002”) to achieve a positive shut-off and maintain precise control.

The upstream disc as a result of differential pressure floats against the downstream disc creating a mated interface and assures a Class IV seal.

Additionally, the differential pressure across the disc stabilizes the control surface and eliminates trim noise and vibration.

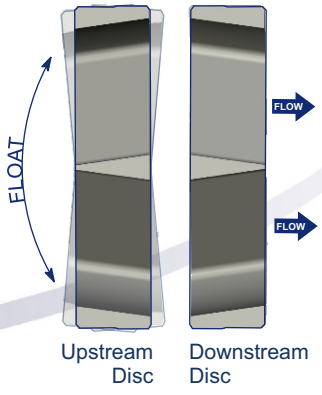

WaferMax Throttling Valve

The Hydroplex WaferMax is a versatile control valve that can be tailored to address sophisticated and simple pressure and flow requirements. Its Wafer construction requires minimum space for installation. The Inline flow path minimizes turbulence reducing erosion and increasing efficiency of the valve. The 3:1 gear ratio provides for precision control, while reducing torque and power requirement for automation. The gear set is isolated from the fluid stream, preventing contact with contaminates and debris which could compromise the valve operation.

All valve and trim components are designed to fit in place seamlessly, allowing for quick configuration to meet specific user process needs. The valve trim is fully guided and stable, minimizing vibration and mechanical noise. The free float design of the disc provides the user with enhanced and extended valve shut-off performance. The Twin Disc and Multistage system can help to better manage full pressure drops. The simplicity of the build also means that maintenance is quick and easy, with no special tools required to service the valve.

Hydroplex Engineered Solution

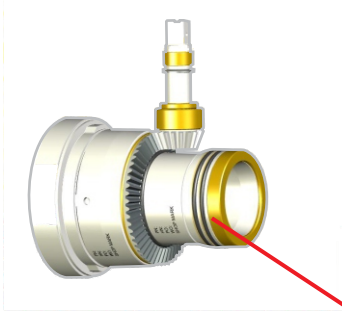

GEAR SET
The Pinion and drive gears are isolated from system fluid

ACTUATION
The body is predrilled for an actuator mounting bracket for electric, pneumatic or hydraulic actuators

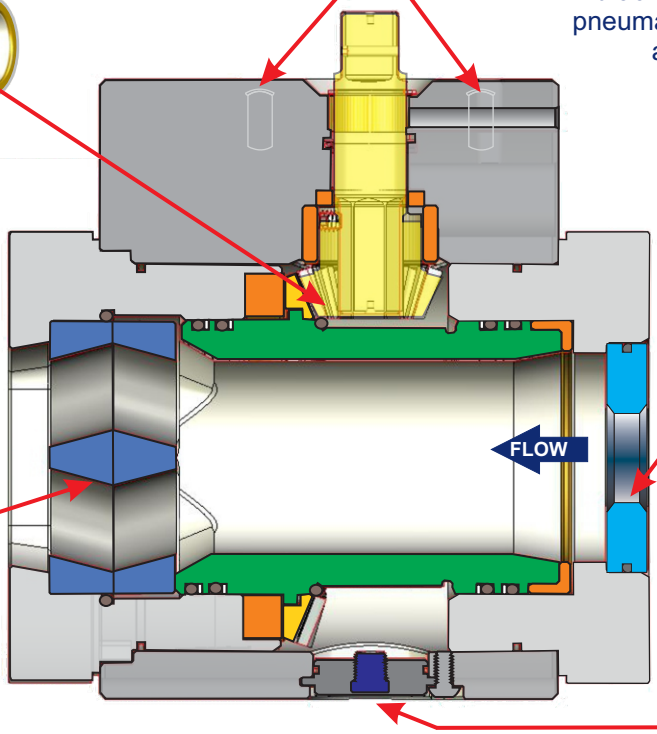

FIXED BEAN
The OPTIONAL Hydroplex Multistage design allows for the placement of a fixed orifice disc upstream of the control discs to achieve a two stage drop within the Valve Body



TWIN DISCS
Control elements are available in a variety of sizes to accommodate flow and pressure requirement. Standard material is Tungsten Carbide

SEAL MONITOR
Port for pressure sensor to monitor seal integrity

OPERATING LIMITS
Maximum Working Pressure 5000 psi

WaferMax Throttling Valve

Optional Features

Actuation: For control system integration.

Multistage Pressure Drop System: Utilizing internal fixed orifice beans for high pressure control.

Dimensions

WaferMax can accommodate:
ANSI or API 3" and 4" flanges &
2" and 3" NPTF connections.
Face to Face Dimensions:
Raised Face and RTJ flanges types are 7.626" .
2" and 3" NPTF connections are 10.50".

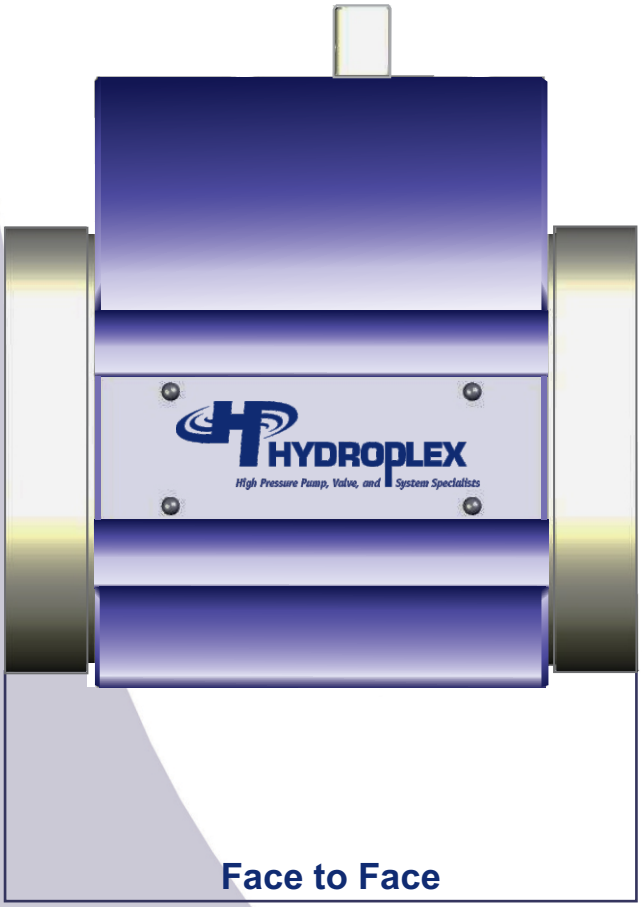

Face to Face

Wetted Component Standard** Materials

Description	Material
Body End Caps	316/316L Stainless Steel
Rotator	17- 4 PH H1150 Stainless Steel
Control Discs	Tungsten Carbide
Stem	17- 4 PH H900 Stainless Steel
Gear Set	High Alloy Steel
O-Rings	HNBR
Backup Rings	PTFE
Fix Bean*	17- 4 PH H900 Stainless Steel

* Optional
** For material other then Standard consult factory

Tungsten Carbide Trim Options

Orifice Size	Cv	64th inch Equiv. Dia.	Orifice Geometry
3.25 Inch Diameter Disc			
2 ea. - 1 3/8"	89.20	125	Pie
2 ea. - 1 1/4"	73.78	113	Pie
2 ea. - 1"	48.79	92	Round
2 ea. - 7/8"	37.36	80	Pie
1.75 Inch Diameter Disc			
2 ea. - 3/4"	27.14	62.3	Pie
2 ea. - 5/8"	18.60	56.8	Pie
2 ea. - 1/2"	11.78	45.3	Round
2 ea. - 3/8"	6.63	33.9	Round
2 ea. - 1/4"	2.95	22.6	Round
2 ea. - 3/16"	1.66	16.9	Round
2 ea. - 1/8"	0.74	11.3	Round

Applications

Automated Well control
Split Flow and Manifold Systems
Salt Water Disposal
Up or Downstream Set Point Control
Pump Startup Bypass
Electric Submersible Pump
H Pump Back-pressure Control
CO^2 Injection
Process Control Valve

WaferMax Inline Throttling Valve

Automation

The WaferMax Throttling/Control valve is specifically designed for applications involving control of flow or pressure in liquid, gas and vapor service. The valve can be fitted with an electric actuator to eliminate environmental emissions involving the venting of instrument gas typically associated with conventional diaphragm operated control valves. This design also offers a significant improvement in reliability and precision over pneumatics that rely on native gas sources, which can be contaminated with liquids and solids.

The WaferMax, coupled with an electric actuator is designed for low energy consumption, operating at 12/24VDC or 120AC with minimal current draw during movement. The control signal can be 4-20 mA, 1-5V, or a dry contact. The WaferMax can control pressures up to 5000 psi and can maintain a Class IV shut-off indefinitely

The WaferMax can be easily modified from manual operation to an automated valve in the field without removal from process system. The pre drilled bracket mounting bolt holes are designed to accommodate an ISO F10 actuator bracket and adapter.

Torque Rating

Differential Pressure	Operating Torque
1,000 lbs.	600 in.-lbf
2,000 lbs.	900 in.-lbf
3,000 lbs.	1200 in.-lbf
4,000 lbs.	1500 in.-lbf
5,000 lbs.	1800 in.-lbf

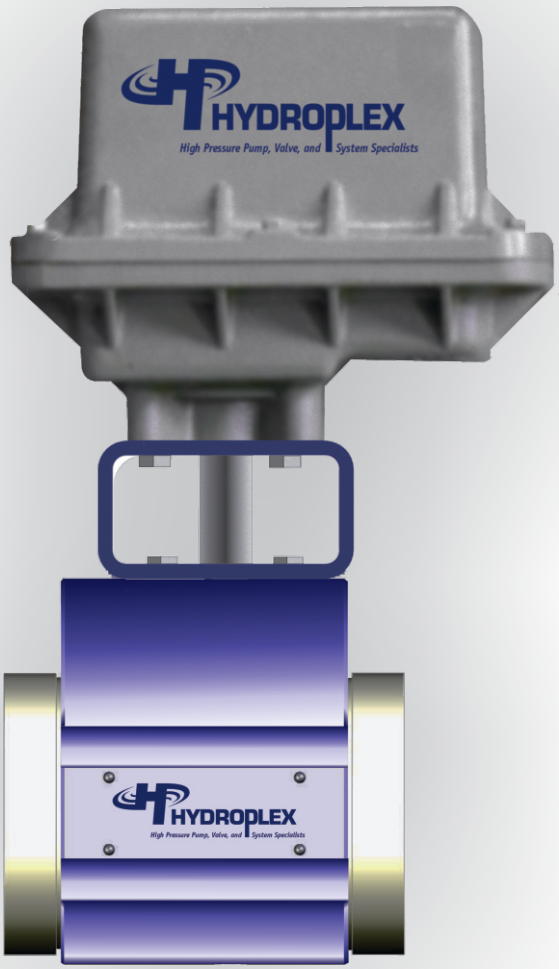

Multistage Pressure Drop

Engineered to regulate fluid pressure or flow velocity, Multistage Pressure Drop configurations are a solution for scenarios where a single-stage trim is insufficient due to specific process conditions. In these cases, this valve type is a more effective alternative. The main reason for using multiple restrictions is to manage the pressure drop, irrespective of the fluid's state (liquid or vapor/gas). A high pressure drop can lead to increased velocities resulting in erosion, vibration, and noise issues.

Where high pressure drops in liquid flows are required, the use of multistage assemblies should be considered to reduce the potential for issues like cavitation, flashing, and increased noise levels. In situations with intense cavitation, the optimal approach is to gradually decrease pressure from the inlet to the outlet. By staging the pressure reduction, this design prevents the process pressure from falling below the vapor pressure, thus avoiding the creation of harmful vapor bubbles.

The term "critical" refers to a pressure drop across the device exceeding 50% of the absolute upstream pressure resulting in sonic velocity being achieved. For gas applications that experience critical flow, careful evaluation is necessary. If the process condition indicates critical flow with a single pressure drop, multi-staged valves can be used to prevent operation at or beyond the critical pressure.

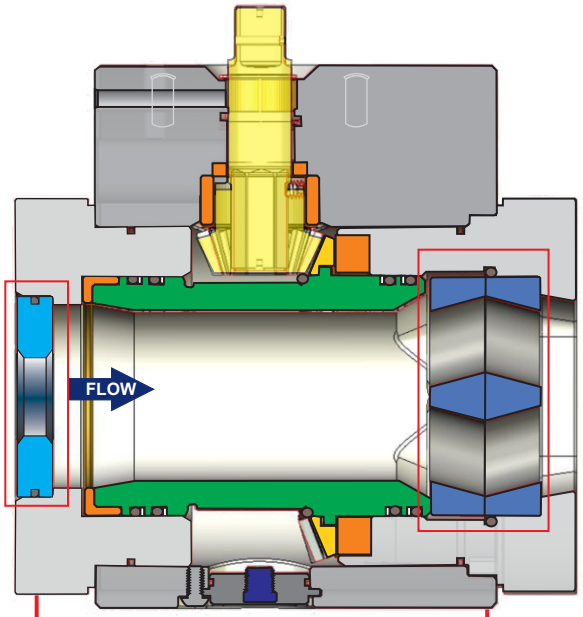

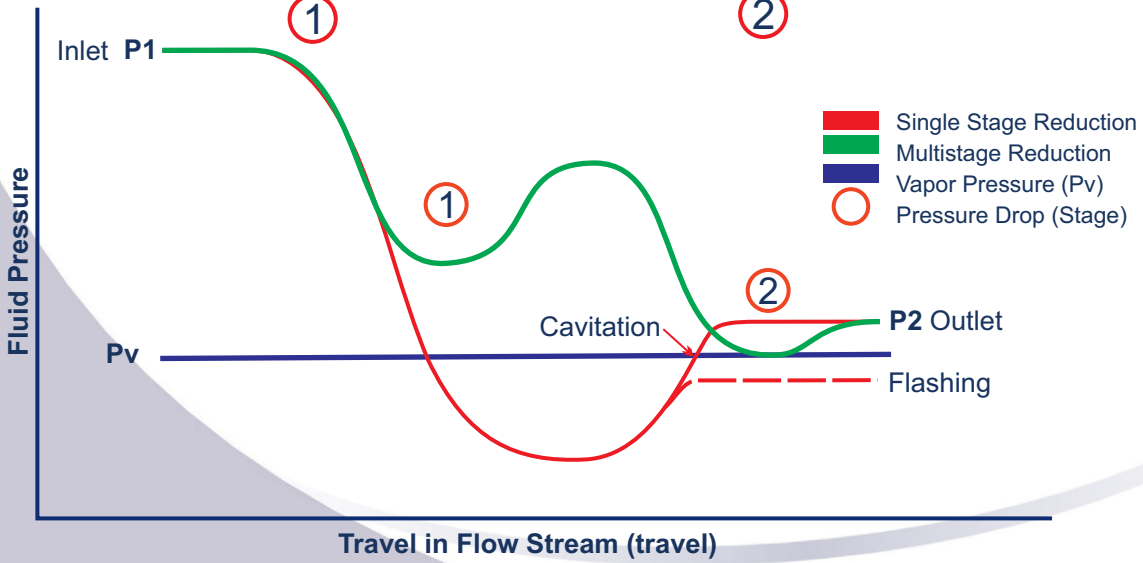

Exploded View

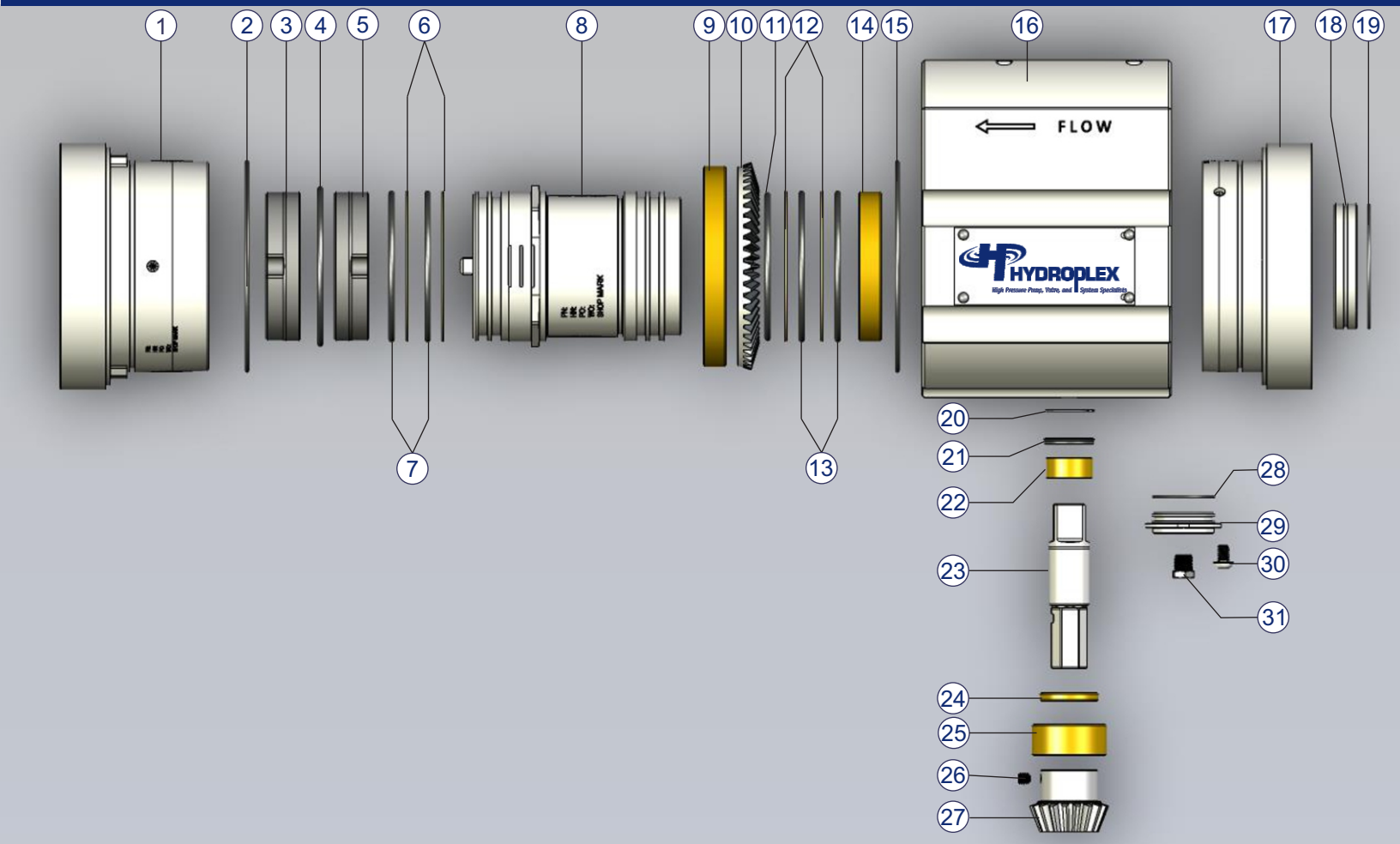

#	DESCRIPTION	#	DESCRIPTION	#	DESCRIPTION
1	Down Stream End Cap	11	O-Ring	21	Wiper Seal
2	O-Ring	12	Backup Ring	22	Stem Bushing
3	Control Disc	13	O-Ring	23	Stem
4	O-Ring	14	Thrust Bushing	24	Thrust bearing
5	Control Disc	15	O-Ring	25	Bushing
6	Backup Ring	16	Body	26	Set Screw
7	O-Ring	17	Upstream End Cap	27	Pinion Gear
8	Rotator	18	Fixed Bean	28	O-Ring
9	Thrust Bushing	19	O-Ring	29	Access Cap
10	Drive Gear	20	Snap Ring	30	Retainer Screw
				31	Threaded Plug

cfrooney Mar 2024

VALVE SUMMARY

HYDROPLEX

HCI THROTTLING VALVE



Configuration:	Inline Segmented Body Thru port
Pressure:	5000 PSI
Nominal Size:	2 Inch
Material Construction:	316 Stainless Steel (Bar)
End Connections:	1” and 2” Threaded / 1”-4” Flanged
Operation:	Manual / Automated
MultiStage Construction:	1 or 2 Stages
Design Function:	Fluid Maintenance
Application:	Oil / Gas Production and Injection
Location:	Upstream gathering system

HCA THROTTLING VALVE



Configuration:	Angle 90 degree body highly configurable
Pressure:	5000 PSI
Nominal Size:	2 Inch
Material Construction:	316 Stainless Steel (CF8M cast)
End Connections:	1” and 2” Threaded / 1”, 2” and 3” Flanged
Operation:	Automated / Manual
MultiStage Construction:	1, 2 or 3 Stage
Design Function:	Fluid Maintenance
Application:	Oil / Gas Production and Injection
Location:	Upstream gathering system

HCY THROTTLING VALVE



Configuration:	Inline “Y” body highly configurable
Pressure:	5000 PSI
Nominal Size:	2 Inch
Material Construction:	316 Stainless Steel (CF8M cast)
End Connections:	1” and 2” Threaded / 1”, 2” and 3” Flanged
Operation:	Automated / Manual
MultiStage Construction:	1, 2 or 3 Stage
Design Function:	Fluid Maintenance
Application:	Oil / Gas Production and Injection
Location:	Upstream gathering system

CSX CONTROL VALVE

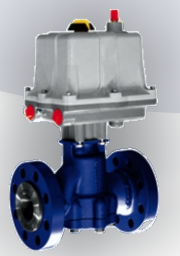

Configuration:	Inline Globe Style body
Pressure:	5000 PSI
Nominal Size:	2 Inch
Material Construction:	Carbon Steel (WCB cast)
End Connections:	1” and 2” Threaded / 2” Flanged
Operation:	Automated / Manual
MultiStage Construction:	1, 2 or 3 Stage
Design Function:	Fluid Maintenance
Application:	Oil / Gas Production and Injection
Location:	Upstream gathering system Gaslift and Plunger Lift

HYDRAMAX CHOKE VALVE

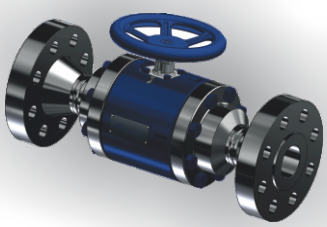

Configuration:	Inline Segmented EXO Body
Pressure:	5000 PSI
Nominal Size:	3 Inch
Material Construction:	Carbon Steel (Bar) Body / 316 Stainless Steel (Bar) Wetted
End Connections:	3” threaded or 3” or 4” Flanged
Operation:	Automated / Manual
MultiStage Construction:	1, 2 or 3 Stage
Design Function:	Fluid Maintenance
Application:	Oil / Gas Production and Injection
Location:	Upstream gathering system, pump pressure maintenance Midstream Plant and Facility fluid control

MINIMAX THROTTLING / DUMP VALVE



Configuration:	Inline or Angle Body Field configurable
Pressure:	3000 PSI
Nominal Size:	2 Inch
Material Construction:	Carbon Steel (WCB cast)
End Connections:	1” and 2” Threaded
Operation:	Automated / Manual
Design Function:	Fluid Maintenance
Application:	Oil / Gas Production and Injection
Location:	Upstream gathering system, Separator let down

Hydroplex Corporation 230 W. Gloria Switch Rd. Lafayette, LA 70507
Telephone: +1 (337) 233-0626 web: www.hydroplex.com